plum HVAC

xTHERM 60D

battery-powered room temperature controller

xTHERM 60D is a wired room temperature controller used to read and maintain the set temperature in a room / heating zone.

- adjustable set room temperature
- capability of measuring humidity levels
- editable operating modes and schedules
- heating and cooling modes
- compatible with the evoFLOOR X controller
- LCD display
- capacitive function buttons
- NO-COM-NC potential-free contact
- floor sensor connector
- flush-mounted

Plum Sp. z o.o.
ul. Wspólna 19, Ignatki, 16-001 Kleosin, Poland
National Waste Database No. 000009381

hvac.plum.pl
hvac@plum.pl

edition
1.2, 21.09.2026

technical data

power supply	3V DC, 2 × AAA 1.5 V, preferably LR03 type
protection rating	IP 20
operating temperature	+5...+35 °C
storage temperature	-10...+60 °C
relative humidity	5...95%, non-condensing
temperature measurement range / accuracy	+5...+35 °C / ±1 °C
humidity measurement range/ accuracy	20...80% RH, non-condensing / ±2%
external temperature sensor	CT10
contact output	NC-COM-NO, 5 (5) A
display	LCD, non-backlit
control	3 x capacitive touch buttons
mounting	flush-mounted (Ø 60 mm installation box)
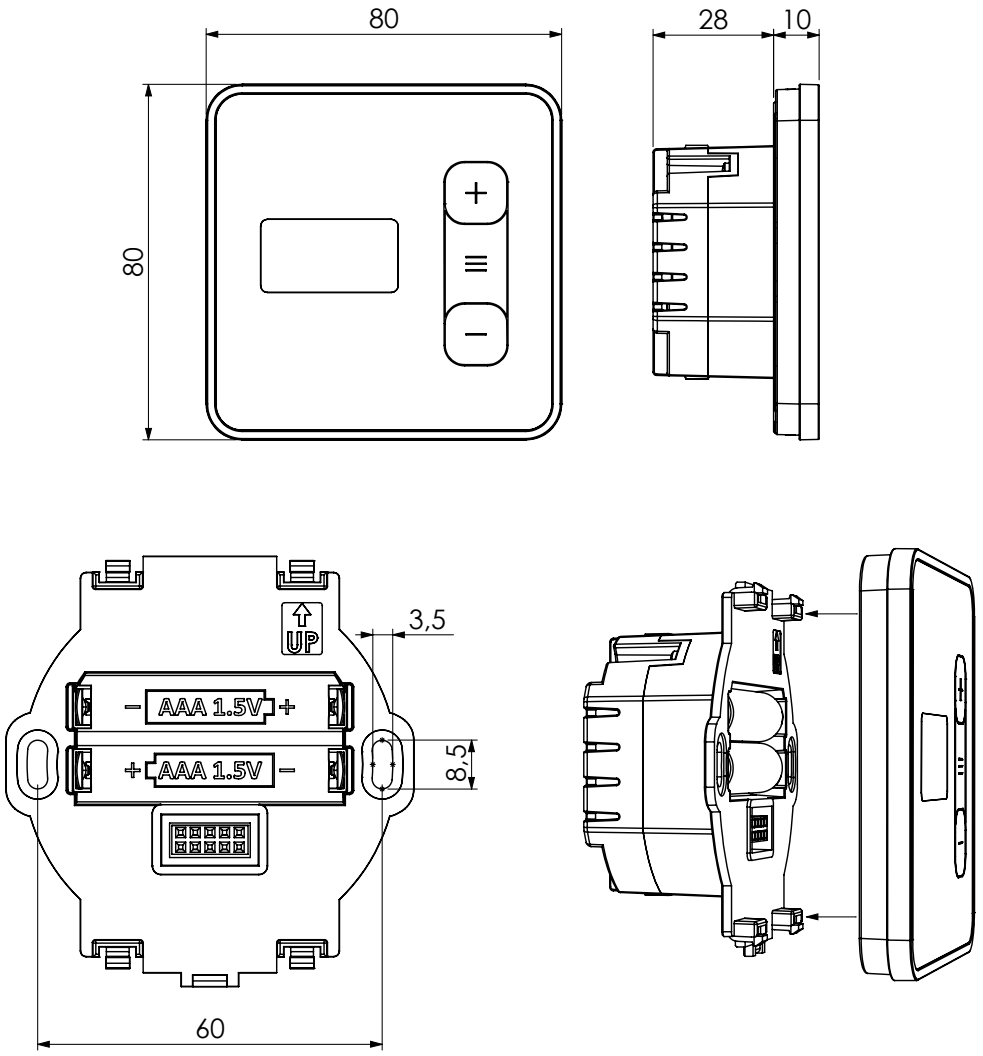
dimensions: